Horn IP Speaker 30W

IPS302030-S

Features

- Built in 1 high-quality speaker with loud sound, long penetration and clear
- Support alarm broadcast with uniview NVR, video and audio linkage.
- Built in storage, support uploading custom audios
- Support two-way audio
- Support PoE power supply

Specifications

Model	IPS302030-S
Speaker	
Rated Power	30 W
Max. Acoustic Pressure	130 dBSPL
Frequency Response	300 Hz to 12.5 kHz
Impedance	8 Ω
Material	
Material	ABS Plastic
Network	
Network Protocol	IPv4, HTTP, HTTPS, SSL/TLS, DNS, TCP, UDP, DHCP, UPnP, ARP, SSH
Interface Protocol (API)	ONVIF, RTSP, RTP, LAPI
Browser	Firefox 87+, Chrome 90+, Edge 90+, Safari 17+
Build in Mic	
Amount	1
Frequency Response	100 Hz to 8 kHz

Sensitivity	-37 dBV/Pa
Sampling Rate	8 kHz
Quantization Bits	16 bit
Audio	
Broadcast	Regular Broadcast, Live Broadcast, Alarm Broadcast
Two-Way Audio	Support
Audio Compression	G.711U
Audio File Format	MP3, WAV
Audio File Size	2 KB ≤ Audio File Size ≤ 10 MB
Audio File Storage	64 MB
Audio File Number	100 (Include system built-in files)
Language	
Language	38 languages: Simplified Chinese, Traditional Chinese, English, Vietnamese, Thai, Turkish, Spanish (Latin America), Portuguese (Brazil), Spanish, Portuguese, French, German, Italian, Dutch, Polish, Czech, Hungarian, Slovak, Russian, Hebrew, Arabic, Ukrainian, Estonian, Bulgarian, Greek, Romanian, Danish, Swedish, Norwegian, Finnish, Croatian, Slovenia, Serbia, Korean, Japanese, Latvian, Lithuanian, Persian
Interface	
Network Interface	1 RJ45 10 M/100 M self adaptive Ethernet Interface
Audio In	RCA (only be used for sound amplification,cannot be used for intercom)
Alarm In	2
Power Supply	PoE (IEEE 802.3at), DC 24 V/1.4 A, DC 12 V/2.5 A
Certification	
Safety	CE LVD (EN IEC 62368-1: 2020+A11: 2020), UL (UL 62368-1, 3rd Ed., Issue Date: 2019-12-13)
EMC	CE-EMC (EN 55032: 2015 + A1: 2020, EN 61000-3-3: 2013 + A1: 2019, EN IEC 61000-3-2: 2019 + A1: 2021, EN 55035: 2017 + A11: 2020), FCC (FCC CFR 47 part15 B, ANSI C63.4-2014)
Environment	CE-RoHS (2011/65/EU; (EU) 2015/863): WEEE (2012/19/EU); Reach (Regulation (EC) No 1907/2006)
Compliance	
NDAA Compliant	Support
Working Environment	
Working Temperature	-30 ℃ to 55 ℃ (-22 ℉ to 131 ℉)
Working Humidity	≤ 90% RH (non-condensing)
Dimensions	
Dimensions	282mm × 205mm× 285mm (11.1"×8.1"×11.2")
Approval	
Protection	IP66

Dimensions

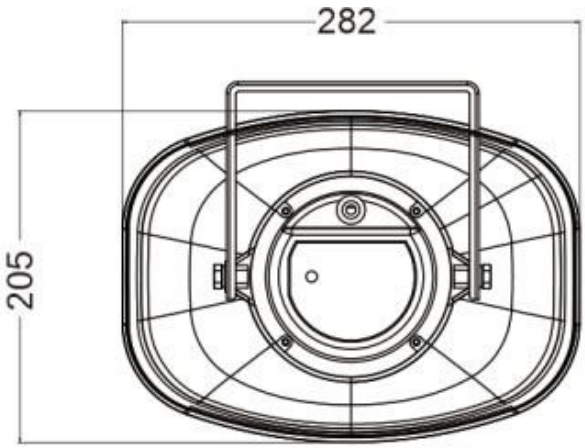

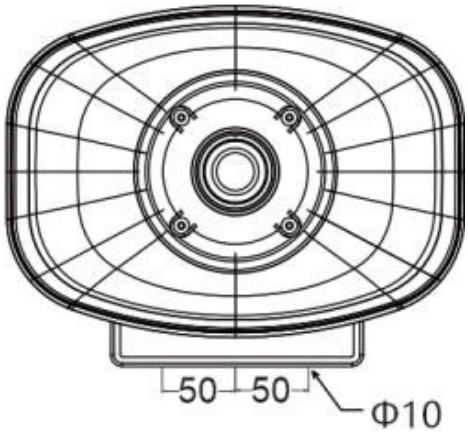

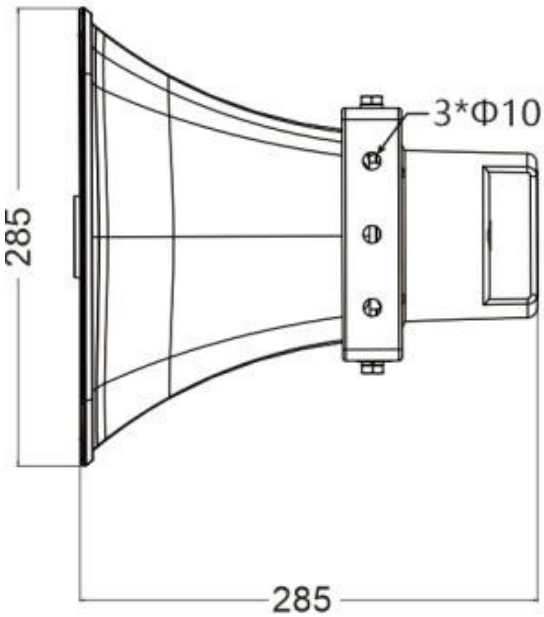

Cable Interface

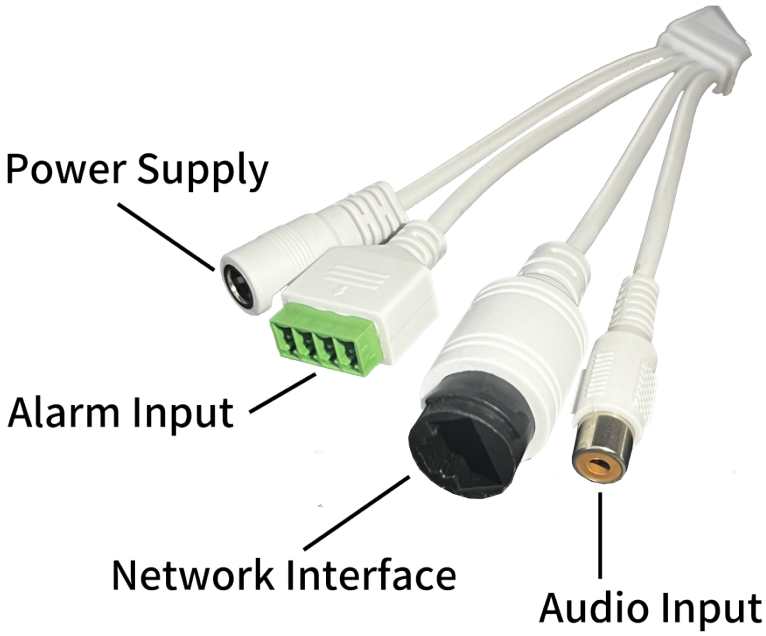

Zhejiang Uniview Technologies Co., Ltd.

http://www.uniview.com

overseasbusiness@uniview.com; globalsupport@uniview.com

No. 369, Xietong Road, Xixing Sub-district, Binjiang District, Hangzhou City, 310051, Zhejiang Province, China

©2023-2025 Zhejiang Uniview Technologies Co., Ltd. All rights reserved.
*Product specifications and availability are subject to change without notice.
*Despite our best efforts, technical or typographical errors may exist in this document.
Uniview cannot be held responsible for any such errors and reserves the right to change the contents of this document without prior notice.