Full Specification sheet

HIGHLY RECOMMENDED FOR COASTAL & CORROSIVE AREAS	
Code 500mm Deep	kg nett
IP55WM6U-ALU	17
IP55WM9U-ALU	22
IP55WM12U-ALU	27
IP55WM15U-ALU	33
IP55WM20U-ALU	41

Fitted with Tamper Proof Hinges & Lock cover

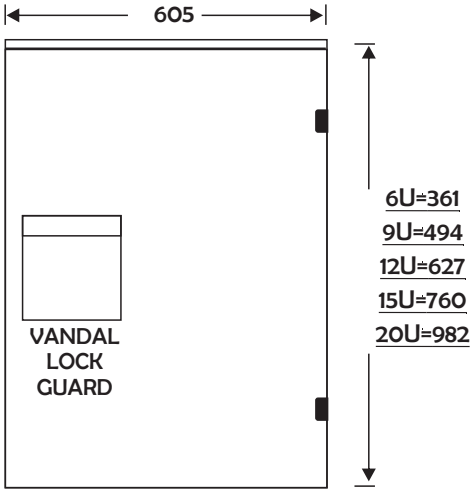

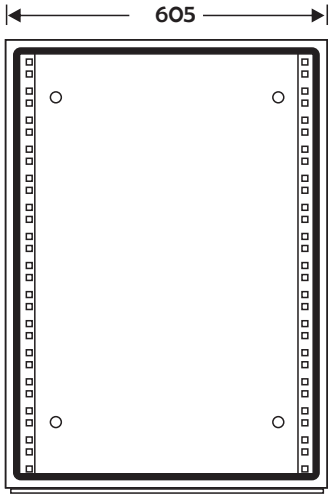

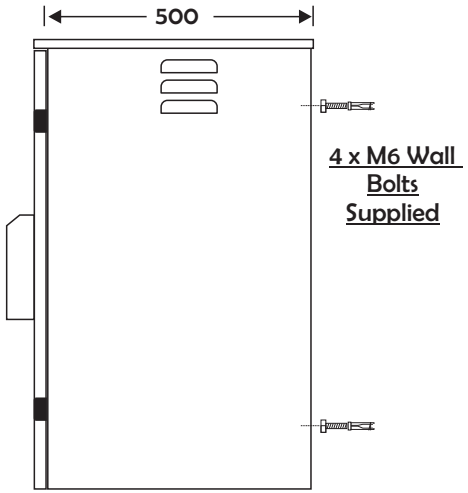

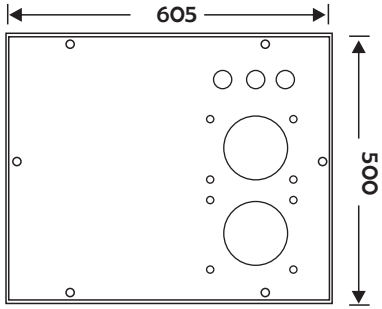

GLAND PLATE 2 FANS (VENTED)

Code: FANTRAY02.IP55-ALZ

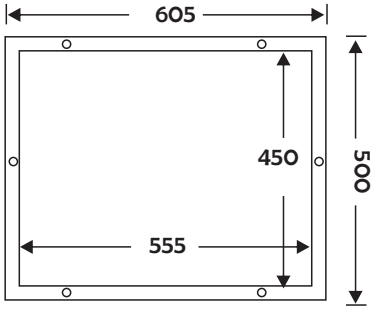

BOTTOM ENTRY

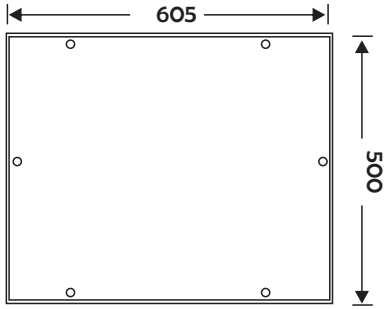

GLAND PLATE PLAIN

Code: GLPL-W

Cabinets manufactured to International 19" standards: EIA

Certificate no: Infra 3817	Description: Ip55 ALU-ZINC WALL UNIT	Third angle projection	Drawn by: RL	Drawing No: E243	Sheet: 1-1	Rev: 0	Date: 24-7-25	Description of changes: Issued	Author: RL
Item: Aries Cabinets	Colour SILVERY -SHEEN	Tolerances 0. = +/- 1.0mm 0.0 = +/- .5mm 0.00 = +/- .2mm	Checked by: ML	Cabinets manufactured to International 19" standards: EIA					
	Material: ALU ZINC PLATE 1.2mm	Pre-Paint: NO Paint							
		Finish: Natural							

SITA

bsi ISO 9001 Quality Management Systems Cert no. FS678923

COPYRIGHT: This Specification sheet is included in the Intellectual property of Eurobyte Technologies (Pty)Ltd.